SELFLOADING DUMPER BED WITH HI-TIP HS SERIE

Selfloading dumper bed with hydraulic front tilting and quick release, hi-tip version on Hinowa minidumpers HS serie

Applicable on the following models:
- HS 1100
- HS 1150
- HS 1200
- HS 1200E
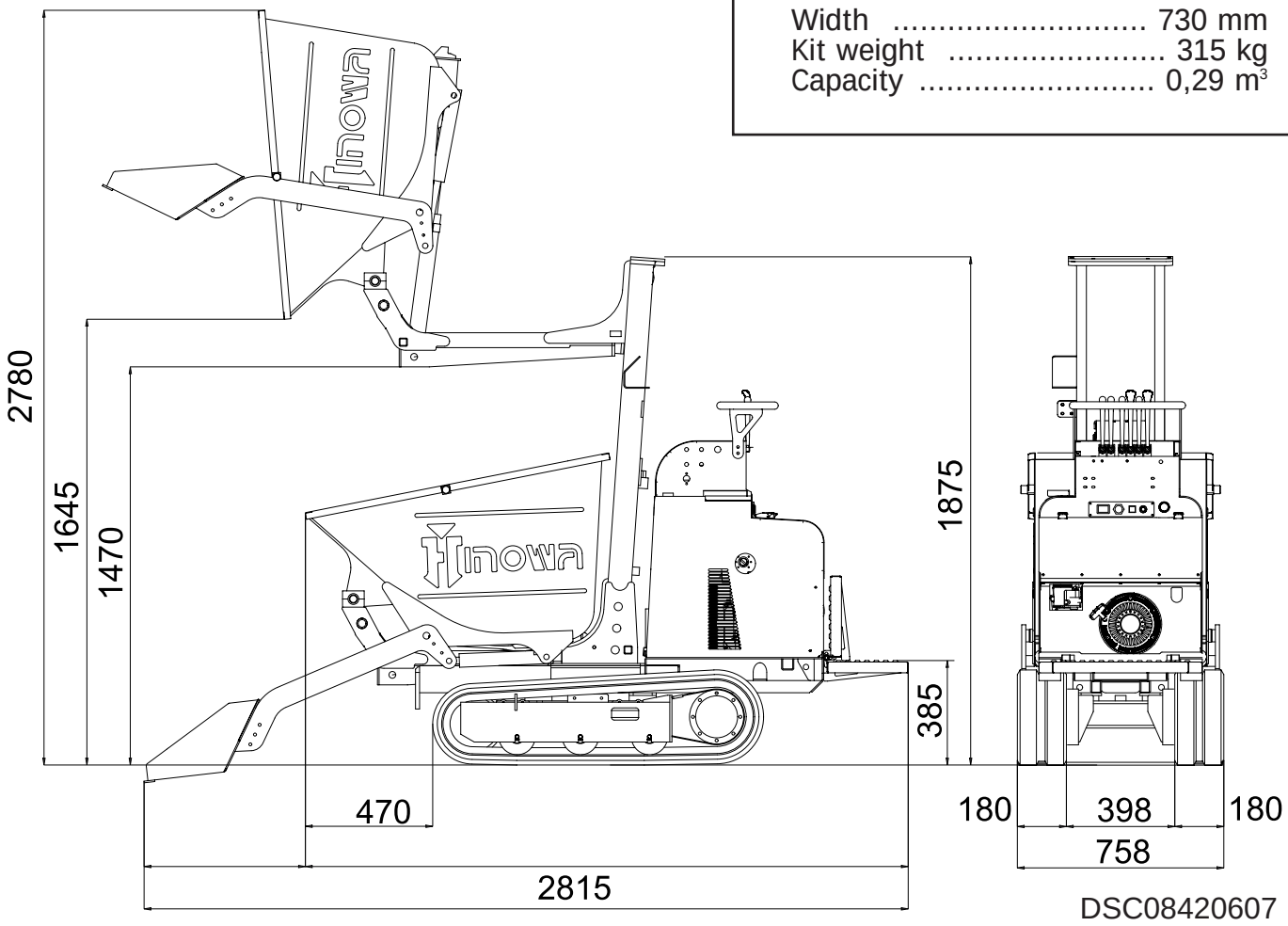
Width ..... 730 mm
Kit weight ..... 315 kg
Capacity ..... 0,29 m³